USE
RELIABLE
INNOVATIVE
COST EFFICIENT

GAS EQUIPMENTS AND GAS SYSTEMS

Gastech
CORPORATION
Air & Gas Technology People

Opp. Pudumjee Paper Mills,
Thergaon, Chinchwad, Pune,
Maharashtra State, India-411033
Telephone. ++91 20 27273809
Telefax ++91 20 27273345
E-mail - gastech@vsnl.com
Website - www.gastechcorp.com

Gastech
CORPORATION
Air & Gas Technology People

Gastech CORPORATION

Gastech CORPORATION is involved in manufacturing of equipment related to the production / generation of various industrial gases, gas systems and providing cost effective solutions.

Since 1989, **Gastech CORPORATION** has been involved with design, consultation and manufacturing of various industrial and medical gases systems, using Pressure Swing Adsorption (PSA) as an air separation process.

Gastech CORPORATION has placed in operation several systems. The main characterization that can be made is Gastech CORPORATION has a capability of custom design and made any system that customer needs to suit specific requirements.
Gastech CORPORATION has to its credit a team of dedicated, experienced, qualified Engineers & technicians to carry out specialized assignments. The company, located in PUNE industrial area and is, equipped with Pipe Cutting & bending equipment's, TIG Welding & Brazing out fits, Assembly & Pressure Testing facilities.

Gastech CORPORATION has several technical achievements to its credit, including the first Indigenous Gas Mixer, the first Pre-heater less CO2 regulation, first indigenous NO2 Scrubber, first indigenous Medical Oxygen Concentrator & only manufacturer of energy less LPG Vaporizers.

For the customers Gastech CORPORATION now represents a reliable source of cost effective & innovative Gas Equipment's & systems

For more details regarding our products please contact us on,

Gastech CORPORATION
Opp. Pudumjee Paper Mills, Thergaon, Chinchwad, Pune,
Maharashtra State, India – 411033
Tel - ++91 20 27273809, +91 20 27273345
Email: gastech@vsnl.com
: sales@gastechcorp.com
Website: http://www.gastechcorp.com

OUR PRODUCT RANGE

- PSA Industrial Oxygen Generator.
- PSA Medical Oxygen Concentrator.
- PSA Nitrogen Generator
- Gas Mixing Systems for welding & heat treatment.
- Gas Mixing Systems for Ethylene Oxide Sterilization.
- Gas Cylinder manifold.
- Gas flow control system
- Energy efficient CO2 & LPG regulation equipments.
- Energy less LPG Vaporizer
- Metal Pickling Equipments with air pollution control.
- Dry Compressed Air systems.
- Vacuum Systems.
- Compressed Air Dryer.
- Gas & Liquid Dryers.
- Gas Purification & Dehydration systems.
- Turnkey engineering, & piping assignments.
- PLC based Master Alarm Panel for Industrial & Medical Gases.
- PLC based Area Alarm Panel for Industrial & Medical Gases.
- PLC based PSA Plant Controllers.
- PLC based process control systems for Industrial applications.
- PLC based Air Compressor & Vacuum Pump Control Panels.
- PLC based Cylinder Manifold Controllers.

Gastech Corporation has several technical achievements to its credit, including the first Indigenous Gas Mixer, the first Pre-heater less CO2 regulation, first indigenous NO2 Scrubber, first indigenous Medical Oxygen Concentrator & only manufacturer of energy less LPG Vaporizers.

For the customers Gastech now represents a reliable source of cost effective & innovative Gas Equipment's & systems.

Gastech
CORPORATION
Air & Gas Technology People

Opp. Pudumjee Paper Mills,
Thergaon, Chinchwad, Pune,
Maharashtra State, India-411033
Telephone. ++91 20 27273809
Telefax ++91 20 27273345
E-mail - gastech@vsnl.com
Website - www.gastechcorp.com

DON 'T

BUY

OXYGEN

MAKE IT YOURSELF

Gastech
CORPORATION
Gas Technology People

Opp. Pudumjee Paper Mills,
Thergaon, Chinchwad,Pune,
Maharastra State, India - 411033
Telephone. ++ 91 20 27273809,
Telefax ++ 91 20 27273345
E-mail - gastech@vsnl.com

Gastech
CORPORATION
Gas Technology People

PSA OXYGEN PRINCIPAL OF OPERATION

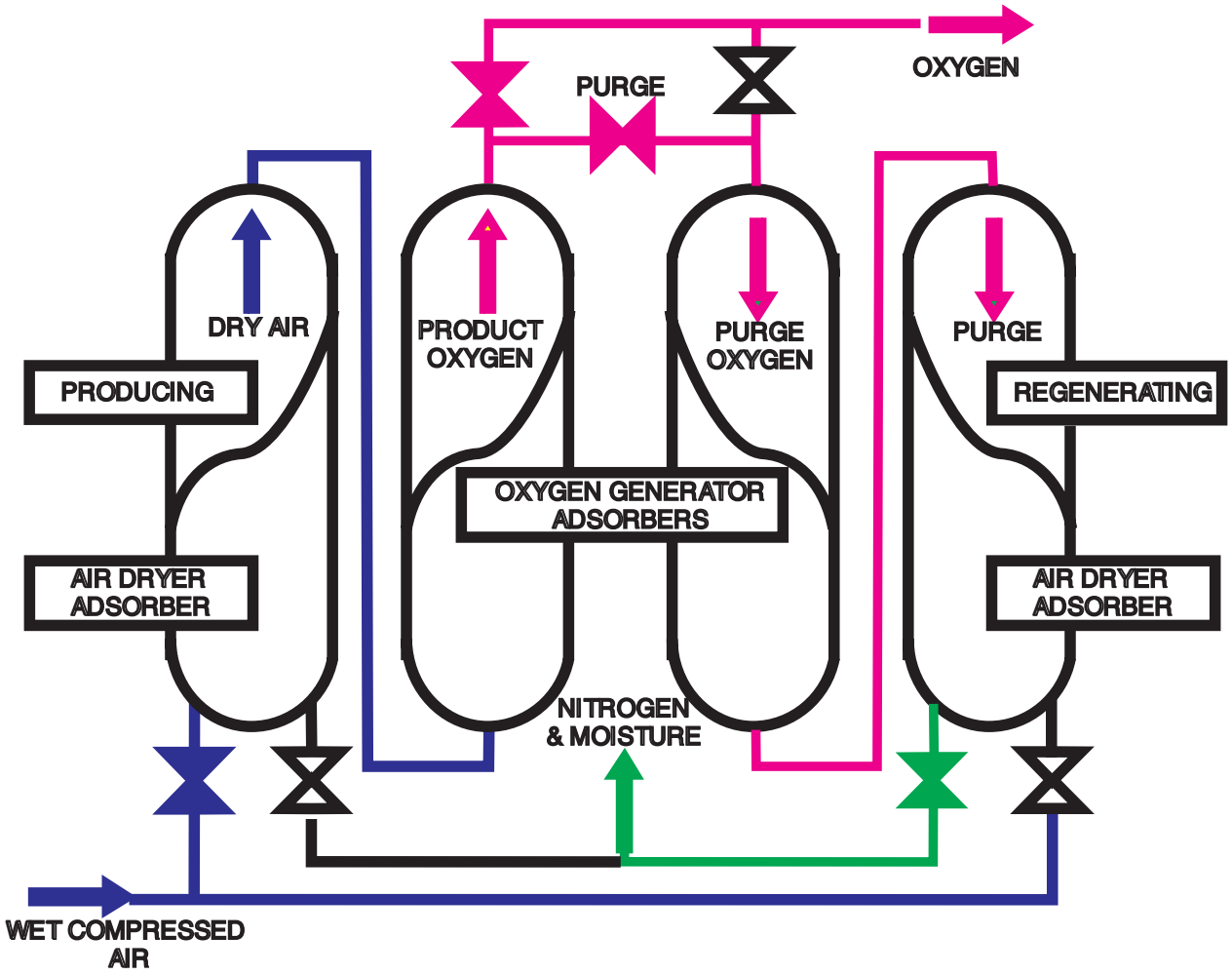

Ambient atmospheric air is compressed in the Air Compressor to 4 – 6 kg/cm2 (g) pressure. Due to the compression the temperature of the air increases & this Compressed Air is cooled in heat exchanger where the air temperature drops down to the ambient temperature. This Compressed Air at ambient temperature contains saturated condense moisture which is removed by a Moisture Separator & the oil contains in this Compressed Air are removed by a special filters.

Gastech
CORPORATION
Gas Technology People

This oil free Compressed Air containing moisture in vapour form enters at the bottom side of one of the Dryer Adsorber filled with a unique quality adsorbent Activated Alumina, which ADSORBS moisture in vapour form producing Dry Moisture free Air at the top. This Moisture free Dry compressed Air enters at the bottom of one of the Oxygen Generator Adsorber, which is filled with unique ceramic zeolite molecular sieve, which ADSORBS Nitrogen in the Compressed Air producing high purity Oxygen at the top.

When the producing Dyer Adsorber & Oxygen Generator Adsorber is saturated with moisture and Nitrogen respectively, the compressed Air feed is automatically switched to the other Oxygen Generator Adsorber via other Dryer Adsorber. The adsorbed Nitrogen from Oxygen Generator Adsorber & moisture from Dryer adsorber is DESORBED when the adsorbers are depressurized, purged & vented to the atmosphere. Each of the Adsorbers cycles between two stages; production & regeneration. One set of dryer & Oxygen Generator Adsorber produces dry Air / Oxygen while other set of Dryer & Oxygen Generator adsorber regenerates themselves. The entire cycle is automatically controlled & under normal operation, no operator attention is required for Gastech Oxygen Generator.

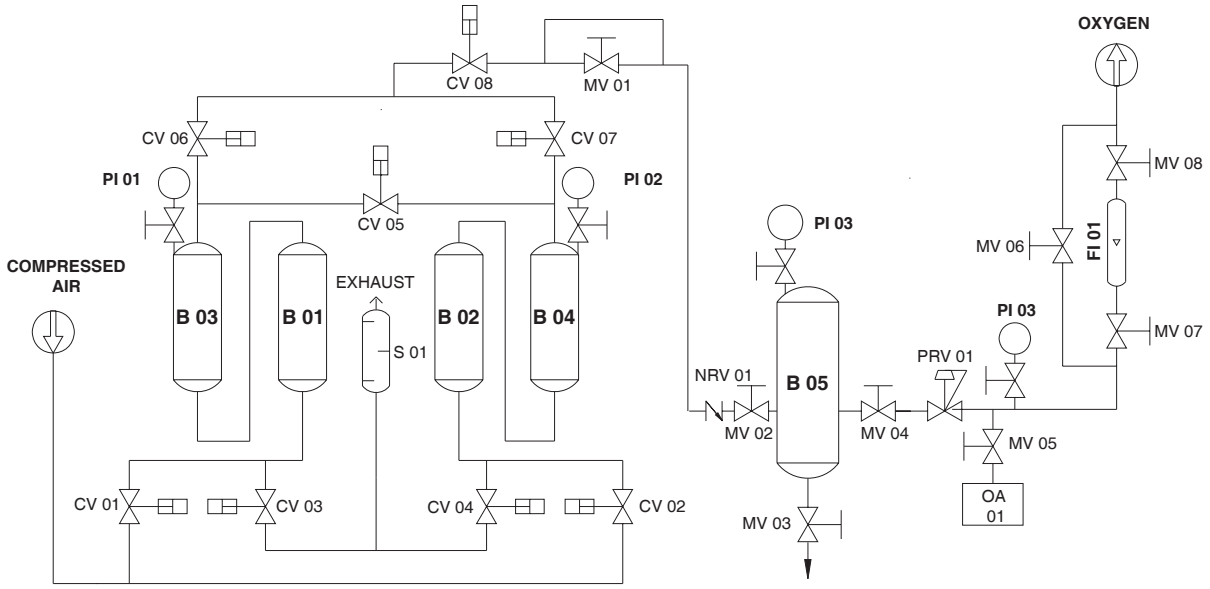

LEGEND	ITEM	LEGEND	ITEM	LEGEND	ITEM
B 01 - B 02	AIR DRYER ADSORBERS	CV	PSA CHANGE OVER VALVE	MV	MANUAL ISOLATION VALVE
B 03 - B 04	PSA ADSORBERS	FI	FLOW INDICATOR	NRV	NON RETURN VALVE
B 05	OXYGEN BUFFER VESSEL	S	SILENCER	OA 01	SAMPLE FOR ANALYZER

SCHEMATICS OF PSA OXYGEN GENERATOR

Gastech
CORPORATION
Gas Technology People

SAVES YOU MONEY AND HEADACHE

The only running cost for our Oxygen Generator is for Electricity. In contrast, Oxygen suppliers charge you not only for the cost of gas or liquir, but also for transportation, equipments / cylinder rental, deposits, valves and regulators maintenance, duties and taxes.

You also pay for evaporation loss of liquid, partially filled incoming cylinders, incompletely utilized returned cylinders, and leakages through the valves.

Precious manpower is needed to procure, load, unload, move connect and disconnect heavy and high pressure cylinders which are inherently unsafe. Also there is a constant headache of unpredictable deliveries and the risk of running out..

MAIN FEATURES OF OXYGEN GENERATOR

* ECONOMICAL
Saves upto 60% compared to cylinders and liquid.

* RELIABLE
Continuous operation, established technology.

* LOW MAINTENANCE
Standard air compressor is the only moving part.

* SAFE
Highest pressure is only 7 kg/cm2.

* AUTOMATIC
Microprocessor controlled unattended operation.

* SIMPLE
Room temperature operation wide turndown.

* QUALITY
Imported Molecular sieve & reliable export quality components.

* SERVICE
Nationwide network for compressor maintenance, other components user seviceable.

Gastech
CORPORATION
Gas Technology People

SPECIFICATIONS

MODEL	CAPACITY M3/Hr	AIR REQUIRED M3/Hr	SPACE REQUIRED M2
OG- 6.	6.	70 to 100.	15.
OG-10	10	120 to 170.	20.
OG-12	12	150 to 200.	20.
OG-15	15	180 to 260.	20.
OG-20	20	240 to 340.	25.
OG-30	30	360 to 500.	30.

NOTES

* Oxygen Purity upto 95% v/v

* Oxygen Dew Point (-) 70 Deg. C max.

* Delivery pressure upto 5.5 kg/cm2(g).

* Smaller, intermediate and larger capacity models available.

* Air consumption depends on purity and pressure.

* Space reqirement includes air compressor.

* Detailed layout can be to suit your site.

* Three phase electricity and cooling water needed for air compressor.

* Optional
  High Pressure Boosters.
  Flow Indicators & recorders.
  Purity Indicators & recorders.
  Analyzers.